BRANCH JOINTS

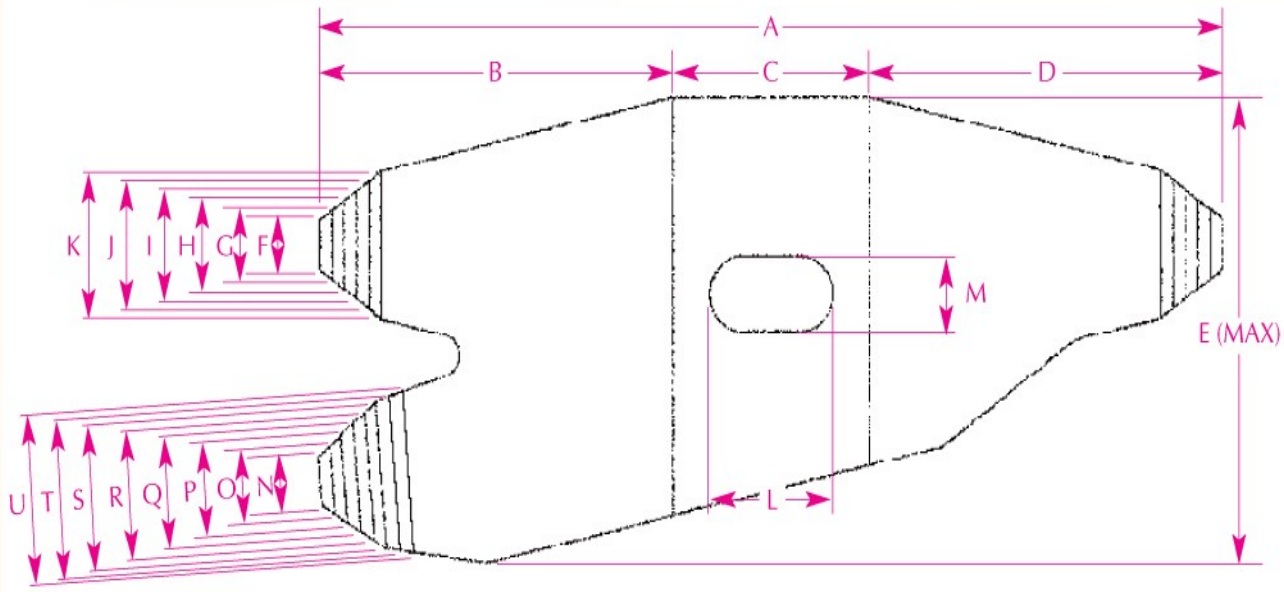

KEY FOR JOINT DIMENSIONS ALL DIMENSIONS ARE INTERNAL. ALL MEASUREMENTS IN MILLIMETRES.

Joint	Resin Packs used	A	B	C	D	E	F	G	H	I	J	K	L	M	N	O	P	Q	R	S	T	U
B4	RP1 (1 pack)	190	79	34	79	62	5	8	11	14	18	21	20	10	5	8	11	14	18	21		
B10	RP3 (1 pack)	220	86	48	86	95	10	14	18	22	26	30	30	15	10	14	18	22	26	30		
B25	RP4 (1 pack)	270	105	60	105	112	17	21	25	30	33	38	30	15	17	21	25	30	33	38		
B50	RP5 (1 pack)	340	120	100	120	120	20	23	26	30	33	36	35	17	20	23	26	32	36	40		
B120	RP6 (1 pack)	400	150	100	150	140	30	35	40	42	48	50	40	20	20	23	27	30	33	36	38	40
B240	RP6 (2 packs)	500	189	125	186	179	50	58	65	71	79	48	40	30	20	23	27	30	33	36	38	40
B400	RP6 (4 packs)	650	245	162	243	213	55	67	79	91	103	115	60	32	20	23	27	30	33	36	38	40

KIT SELECTION CHART FOR LV BRANCH JOINTS - ARMOURED CABLES

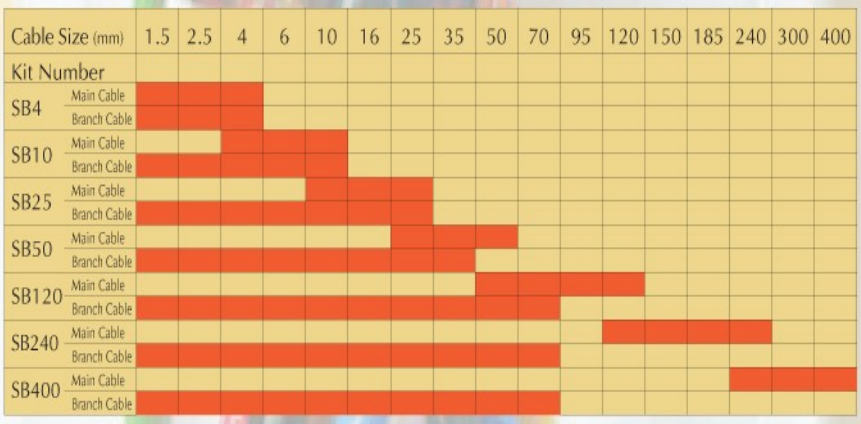
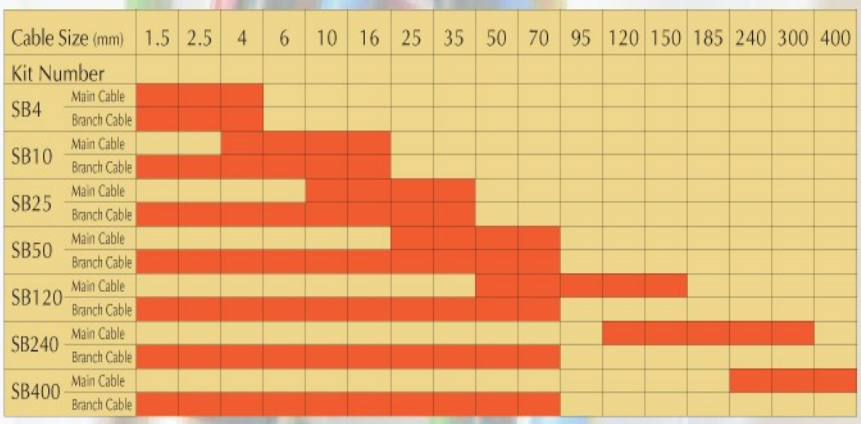
KIT SELECTION CHART FOR LV BRANCH JOINTS - UNARMOURED CABLES